Bronze pump excl. pre-filter 0,37-1,1kW 2900 rpm

Centrifugal pumps of high quality bronze alloy and especially designed for swimming pools to meet the demands for high capacity, silent operation and long and trouble-free service. Both pump and motor are built into one unit.

If service is ever required it is very easy to separate the pump and pump house and this requires no interference with pipes and connections.

Technical data				Ampere	
Item no.	kW	Phase	Volt	400V	230V
11416	0,37	3	230/400	1,0	1,7
11417	0,55	3	230/400	1,4	2,5
11418	0,75	3	230/400	1,9	3,2
11419	1,1	3	230/400	3,0	4,6
11424	0,37	1	230		2,7
11425	0,55	1	230		4,0
11426	0,75	1	230		5,5
11427	1,1	1	230		6,3

Pump capacities 0,37-1,1kW

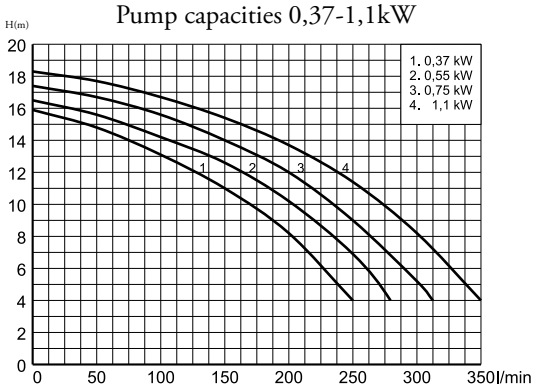

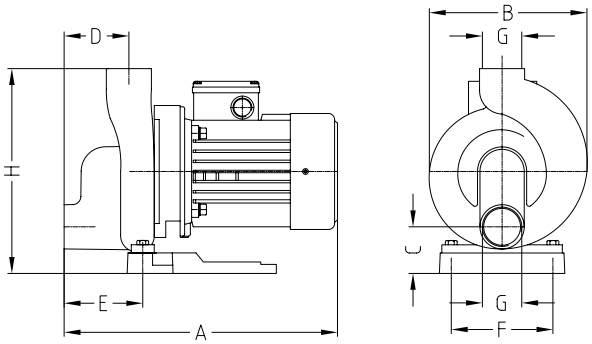

Dimensions									
Item no.	kW	A	B	C	D	E	F	G	H
11416	0,37	365	190	56	78	100	125	1½”	250
11417	0,55	365	190	56	78	100	125	1½”	250
11418	0,75	400	190	56	78	100	125	1½”	250
11419	1,1	400	190	56	78	100	125	1½”	250
11424	0,37	365	190	56	78	100	125	1½”	250
11425	0,55	365	190	56	78	100	125	1½”	250
11426	0,75	400	190	56	78	100	125	1½”	250
11427	1,1	400	190	56	78	100	125	1½”	250