Pahlén swimming pool equipment

Placing
Place the pump on a lower level than the water surface and close to the pool to have a short suction pipe, yet not closer than 2 m considering the electrical directions. Install the pump on a solid foundation in a dry place with sufficient ventilation and with no risk for flooding. Pumps with pre-filter should be placed in such a way that the strainer basket in the pre-filter easily can be emptied.

Suction pipe
Dimension the suction pipe according to the table below. Seek free dribble from the pool to the pump. The suction pipe should be equipped with a stop valve. If a soft suction pipe is used it has to be armoured. If the pump is placed higher than the pool water surface, a check valve shall be installed on the suction pipe. Avoid sharp bends. Check that the connections are tight. (Use thread tape when sealing the threads.)

Pressure pipe
Dimension the pressure pipe according to the table below. Connect the pressure pipe of the pump to the filter. Avoid sharp bends. Check that the connections are tight. (Use thread tape when sealing the threads.)

Electrical connection
The pump motor must be installed by a licenced electrician and be equipped with an approved motor protection, that shall be adjusted according to the rated current of the motor indicated on the motor rating plate, and an all pole switch. Check that the direction of rotation of the pump is correct. (See the arrow sense of rotation on the motor.)

Operation
See that the pump is filled with water before start. The pump must never be dry run, as this could damage the shaft seal. Check that all valves to and from the pump are open. Do not run the pump with a closed valve, as this may cause damage to the pump. At the risk for freezing the pump and the inlet- and outlet pipes shall be drained. The pumps 1,5 – 7,5kW must not work continuously below 10 H(m) back pressure.

Check that the electric current is switched off before any work with the pump is begun.

Recommended pipe dimensions

Pump kW	Outer pipe diameter suction side (max 10 m)	Outer pipe diameter pressure side (max 20 m)
0,37-0,55 P01	50 mm	50 mm
0,75-1,5 P01	50 mm - 63 mm	50 mm
1,5 P2000	90 mm	75 mm
2,2 P2000	110 mm	90 mm
4,0 P2000	125 mm	110 mm
5,5	140 mm	125 mm
7,5	200 mm	160 mm

Important!
The water must not be aggressive.

Follow the instructions stated below:

Chlorine content:	max 3 mg/l (ppm)
Chloride content:	max 150 mg /l
pH-value:	7,2 - 7,8
Alkalinity:	60-120 mg/l (ppm)
Calcium hardness:	200-1000 mg/l (ppm)

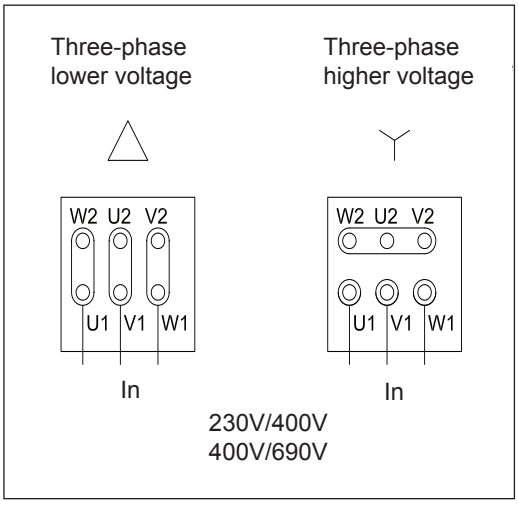

ENGLISH

Pahlén AB, Box 728, SE-194 27 Upplands Väsby, Sweden
Tel. +46 8 594 110 50, Fax +46 8 590 868 80, e-mail: info@pahlen.se, www.pahlen.com