Plastic pump water cooled 0,60-1,5kW 2750 rpm

This water cooled plastic pump is so designed, that the fluid surrounds the rotor and the bearing of the motor. The fluid lubricates the pump bearing and cools the component parts. The design gives the pump an extremely silent operation and demands a minimum of service.

Technical data				Ampere	
Item no.	kW	Phase	Volt	400V	230V
115900	0,60	3	230/400	1,7	2,9
115910	0,75	3	230/400	1,9	3,3
115920	0,95	3	230/400	2,9	4,9
115930	1,5	3	230/400	3,4	5,8

Advantages
- Patented water cooled motor
- Vibration free bearing without ball bearing
- Free of maintenance without mechanical shaft seal
- Light and compact design

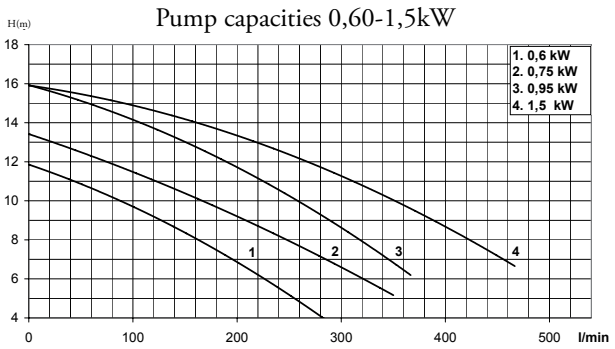

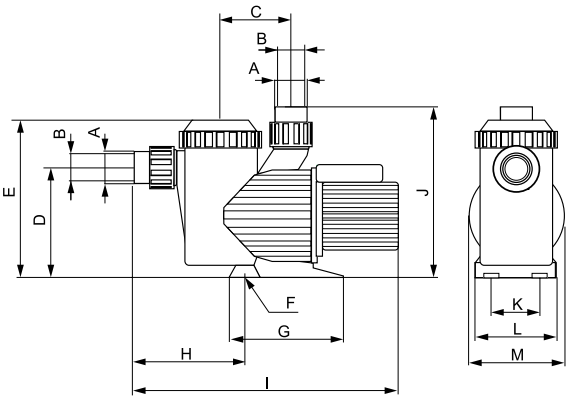

Dimensions													
Item no.	A	B	C	D	E	F	G	H	I	J	K	L	M
115900		Ø50	160	250	360	Ø9	256	265	525	366	116	186	210
115910		Ø50	160	250	360	Ø9	256	265	560	366	116	186	210
115920	Ø63		160	250	360	Ø9	256	300	595	400	116	186	210
115930	Ø63		160	250	360	Ø9	256	300	595	400	116	186	210