Bronze pump 7,5kW 2900 rpm

A centrifugal pump designed for larger pool installations to meet the demands for high capacity, silent operation and long and trouble-free service. The pump is equipped with a large pre-filter to collect impurities such as leaves, insects etc. Four large wing screws allow easy access to the filter basket for cleaning purposes. The filter basket is made of stainless steel.

The pump and filter house is manufactured in a corrosion free bronze alloy. Even the pump impeller is made of bronze and is mounted on an acid proof stainless steel shaft.

Technical data				Ampere
Item no.	kW	Phase	Volt	400V
12225	7,5	3	400/690	14
12227	7,5	3	400/690	14

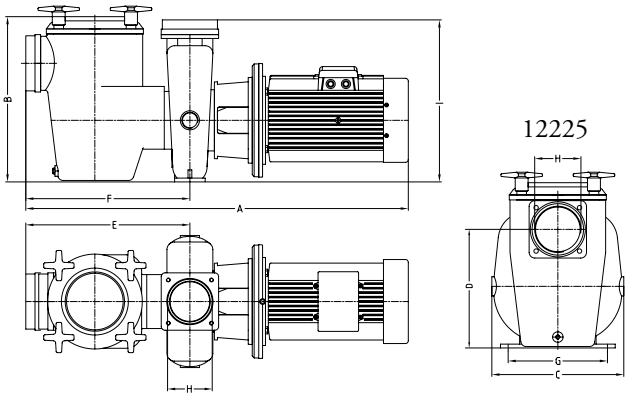

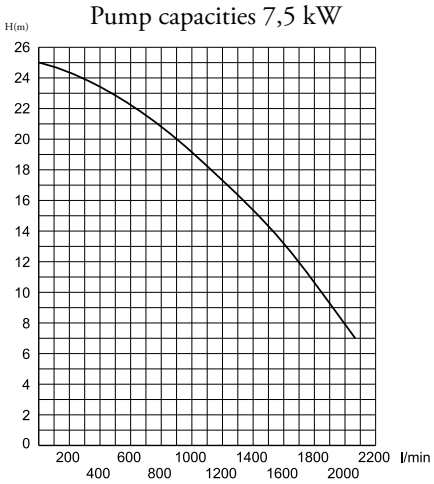

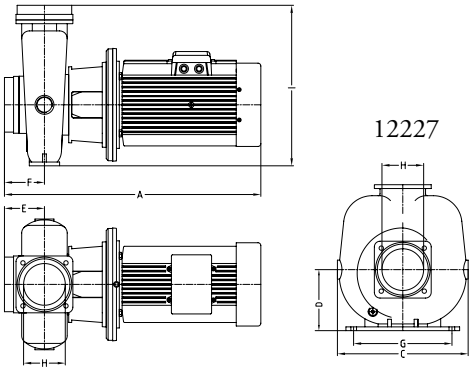

Dimensions											
Item no.	**Type**	**kW**	**A**	**B**	**C**	**D**	**E**	**F**	**G**	**H**	**I**
12225	Filter pump	7,5	995	410	360	300	390	390	260	110	430
12227	Filter pump excl. pre-filter	7,5	720		360	160	115	115	260	110	430