Bronze pump P85 5,5kW 2900 rpm

To ensure the best and most economical filtration of pool water it is important to choose a pump of the correct capacity. Pahlén bronze pumps are especially developed for swimming pools to meet the demands for high capacity, silent operation and long and trouble-free service. All pumps are equipped with a large filter and a filter basket, which is easily accessible for cleaning.

The pump and filter house is manufactured in a corrosion free bronze alloy. Even the pump impeller is made of bronze and is mounted on an acid proof stainless steel shaft.

Technical data				Ampere
Item no.	kW	Phase	Volt	400V
11223	5,5	3	400/690	11
11523	5,5	3	400/690	11

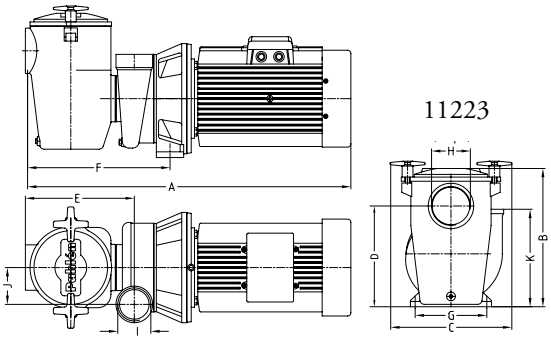

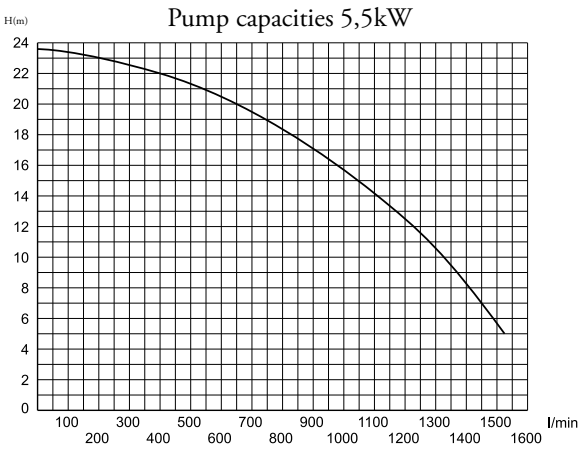

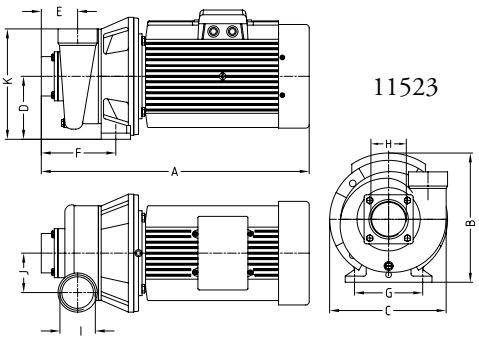

Dimensions													
Item no.	Type	kW	A	B	C	D	E	F	G	H	I	J	K
11223	Filter pump	5,5	815	330	275	250	240	315	140	3”	2½”	82	235
11523	Filter pump excl. pre-filter	5,5	640	275	275	137	77	155	140	2½”	2½”	82	235