Bronze pump P01 0,37-1,5kW 2900 rpm

The Pahlén production of centrifugal pumps is especially designed for swimming pools and meet the demands for high capacity, silent operation and long and trouble-free service. The pumps are of high quality and manufactured of bronze alloy, which, after 40 years experience, has proved to be an excellent choice of material for swimming pools.

Both pump and motor are built into one unit, which also contains a pre-filter which effectively collects leaves, insects etc. Access to the filter basket is via an easily removable cover, held in place by two large wing screws. If service is ever required it is very easy to separate the pump and pump housing and this requires no interference with pipes and connections. The high class motors used provide stable and quiet operation.

Technical data				Ampere	
Item no.	kW	Phase	Volt	400V	230V
120100	0,37	3	230/400	1,0	1,6
120105	0,55	3	230/400	1,4	2,3
120110	0,75	3	230/400	1,7	2,8
120115	1,1	3	230/400	2,4	4,0
120120	1,5	3	230/400	3,0	4,9
120200	0,37	1	230		2,4
120205	0,55	1	230		3,7
120210	0,75	1	230		5,0
120215	1,1	1	230		6,7
120220	1,5	1	230		9,2

Pump capacities 0,37-1,5kW

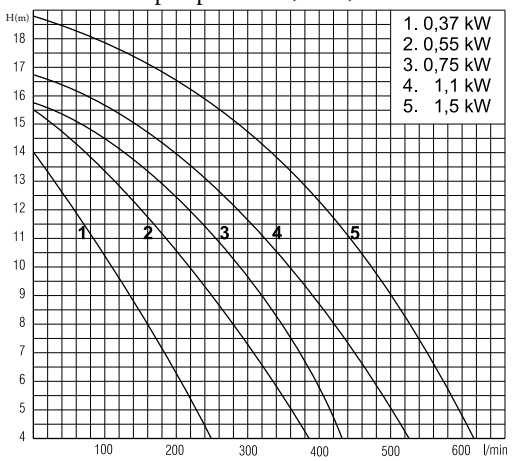

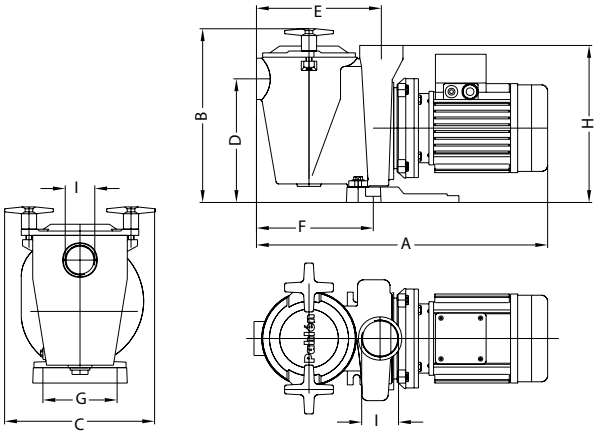

Dimensions										
Item no.	kW	A	B	C	D	E	F	G	H	I
120100, 120200	0,37	470	285	245	210	202	160	126,5	255	2”
120105, 120205	0,55	470	285	245	210	202	160	126,5	255	2”
120110, 120210	0,75	510	285	245	210	202	160	126,5	255	2”
120115, 120215	1,1	510	285	245	210	202	160	126,5	255	2”
120120, 120220	1,5	510	285	245	210	202	160	126,5	255	2”