Plastic pump 0,37-1,5kW 2850 rpm

Pahlén can also supply easily serviced pool pumps manufactured of noryl plastic built in one unit with pump and motor. There is a strainer basket for collecting larger particles. This basket has a transparent lid which allows easy inspection and access to the basket. Servicing is simple without dismantling of either pipes or connections.

Technical data					Ampere		
Item no.	Type	kW	Phase	Volt	400V	230V	L
115700	ND-14T	0,55	3	230/400	1,6	2,8	544
115710	ND-19T	0,75	3	230/400	1,8	3,2	544
115720	ND-24T	1,1	3	230/400	3,2	5,6	566
115730	ND-28T	1,5	3	230/400	3,7	6,5	566
115740	ND-9M	0,37	1	230		3,5	544
115750	ND-14M	0,55	1	230		4,2	544
115760	ND-19M	0,75	1	230		5,4	544

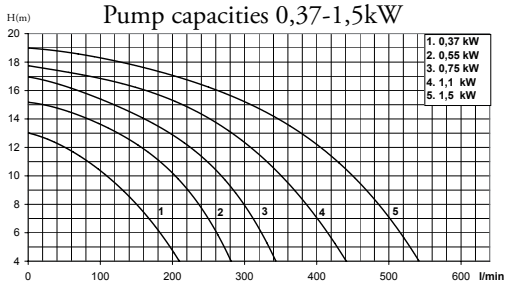

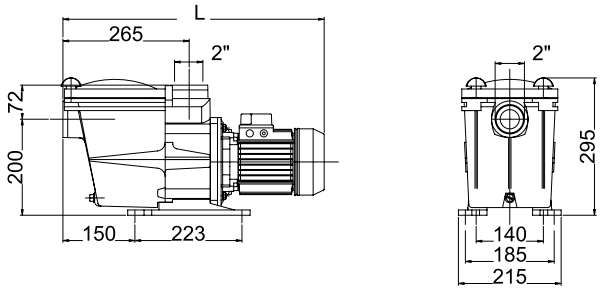

Plastic pump 0,25kW 2850 rpm
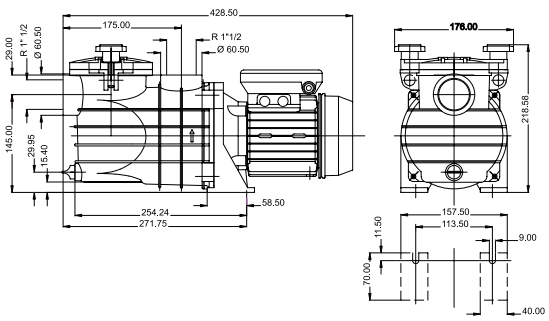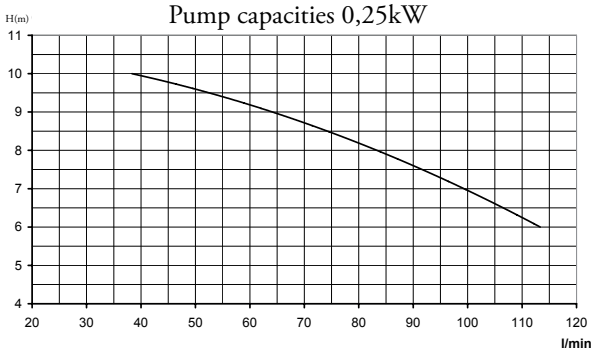
Technical data					
Item no.	Type	kW	Phase	Volt	Ampere
115820	Micro 33	0,25	1	230	2,2