Bronze pump excl. pre-filter 1,5-4,0kW 2900 rpm

Centrifugal pumps of high quality bronze alloy and especially designed for swimming pools to meet the demands for high capacity, silent operation and long and trouble-free service. Both pump and motor are built into one unit.

If service is ever required it is very easy to separate the pump and pump house and this requires no interference with pipes and connections.

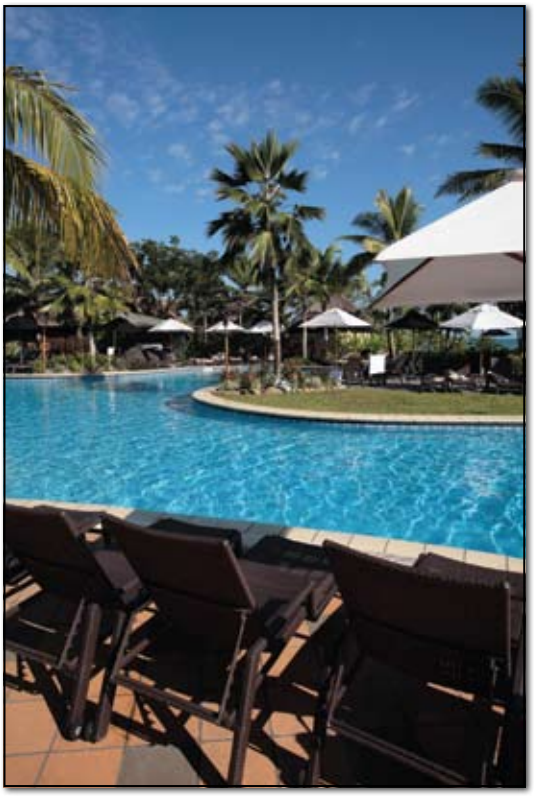

Technical data				Ampere	
Item no.	**kW**	**Phase**	**Volt**	**400V**	**230V**
115201	1,5	3	230/400	3,4	5,9
115211	2,2	3	230/400	4,8	8,3
115221	4,0	3	400/690	7,9	
115281	1,5	1	230		9,9

Pump capacities 1,5-4,0kW

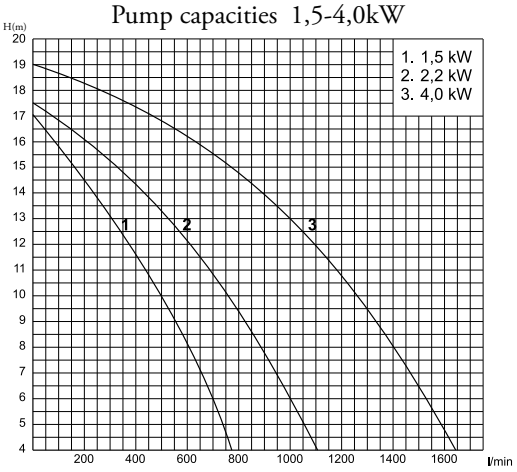

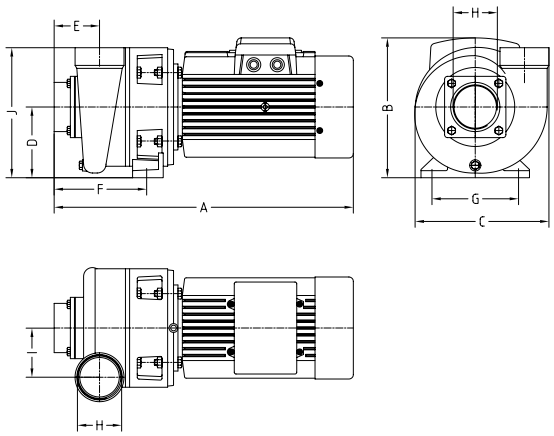

Dimensions											
Item no.	**kW**	**A**	**B**	**C**	**D**	**E**	**F**	**G**	**H**	**I**	**J**
115201	1,5	445	245	230	122	77	155	130	2½”	82	220
115211	2,2	445	245	230	122	77	155	130	2½”	82	220
115221	4,0	540	285	230	122	77	155	130	2½”	82	220
115281	1,5	445	245	230	122	77	155	130	2½”	82	220