Bronze pump P2000 1,5-4,0kW 2900 rpm

To ensure the correct circulation and filtration of pool water it is important to choose a correctly dimensioned pump. Pahlén manufacture pumps to satisfy the majority of pool installations. These pumps are manufactured completely from corrosion free bronze and are equipped with a large pre-filter to collect impurities such as leaves, insects etc. This filter has an easily removable filter basket.

The pump has a bronze impeller mounted on a shaft of acid proof stainless steel and is easily accessible for service without dismantling or loosening pipes and connections.

Technical data				Ampere	
Item no.	kW	Phase	Volt	400V	230V
112201	1,5	3	230/400	3,0	4,9
112211	2,2	3	230/400	4,3	7,1
112221	4,0	3	400/690	7,9	
112281	1,5	1	230		9,2

Pump capacities 1,5-4,0kW

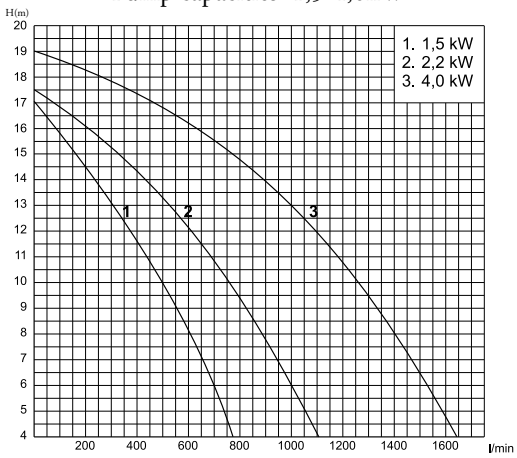

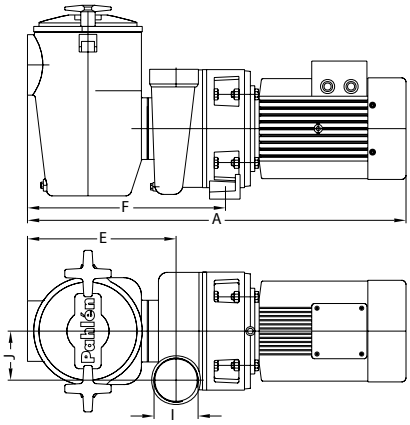

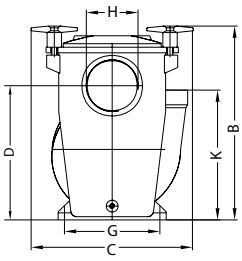

Dimensions												
Item no.	kW	A	B	C	D	E	F	G	H	I	J	K
112201	1,5	620	335	275	225	250	330	130	3”	2½”	82	220
112211	2,2	620	335	275	225	250	330	130	3”	2½”	82	220
112221	4,0	710	335	275	225	250	330	130	3”	2½”	82	220
112281	1,5	620	335	275	225	250	330	130	3”	2½”	82	220